Technical sheet :

MSI 40

MANITOU
HANDLING YOUR WORLD

	Technical characteristics		Metric
1.1	Manufacturer		Manitou
1.2	Model Name		MSI 40
1.3	Power source		Diesel
1.4	Operator type		Seated
1.5	Max. capacity	Q	4000 kg
1.6	Load centre of gravity	c	500 mm
1.8	Load distance, centre of drive axle to fork	x	691 mm
1.9	Wheelbase	y	2075 mm
	Weight		
2.1	Service Weight		6980 kg
2.2	Weight on front axle (laden) / rear axle (laden)		9245 kg / 1735 kg
2.3	Weight on front axle (Unladen) / rear axle (Unladen)		3210 kg / 3770 kg
	Wheels		
3.1	Tyres type		Pneumatic
3.2	Dimensions of front wheels		315/70 R22,5
3.3	Dimensions of rear wheels		225/75 R15
3.5	Number of front wheels / rear wheels		2 / 2
3.2	Number of drive wheels		2
3.6	Front wheel gauge	b10	1420 mm
3.7	Rear wheel	b11	1142 mm
	Dimensions		
4.1	Tilt of Mast Forward (deg) / Backward (deg)	α / β	10 / 12
4.7	Overall height of standard overhead guard	h6	2440 mm
4.8	Seat height/stand height	h7	1300 mm
4.12	Height of towing bar (coupling height)	h10	540 mm
4.19	Overall length	l1	4494 mm
4.20	Length to face of forks	l2	3294 mm
4.21	Overall width	b1	1732 mm
4.22	Forks section / width / length	s / e / l	50 mm x 150 mm x 1200 mm
4.23	Fork carriage ISO 2328 (class/form) A/B		3A
4.24	Fork carriage width	b3	1670 mm
4.31	Ground clearance below mast	m1	185 mm
4.32	Ground clearance at centre of wheelbase	m2	225 mm
4.33	Aisle width for 1000 x 1200 pallet widthways	Ast	4756 mm
4.34	Aisle width for 800 x 1200 pallet lengthways	Ast	4956 mm
4.35	Turning radius	Wa	2865 mm
4.36	Internal turning radius (over tyres)	b13	125 mm
	Performances		
5.1	Travel speed (laden / unladen)		22 km/h / 22 km/h
5.2	Lifting speed (laden / unladen)		0.6 Nm / 0.6 Nm
5.3	Lowering speed (laden / unladen)		0.4 Nm / 0.5 Nm
5.5	Drawbar pull (Laden / Unladen)		3180 daN / 2020
5.7	Gradeability - laden / unladen (%)		24 % / 29
5.10	Service brake		Hydraulic

	Engine		
7.1	Engine brand / model		Perkins / 854 F 10794
7.2	Engine power according to ISO 1585		55 kW
7.3	Rated speed (rpm)		2200
7.4	Number of cylinders / Capacity of cylinders		4-3400 cm³
	Miscellaneous		
8.1	Type of drive control		Hydraulic
8.2	Working hydraulic pressure for attachments (bar)		230 Bar
8.3	Oil flow rate for attachments (l/min)		103
8.4	Measured/guaranteed mean noise level at the ear of the operator		81

Dimensional drawing

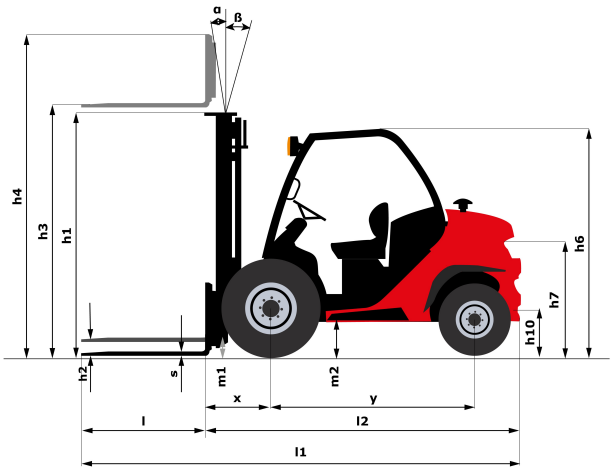

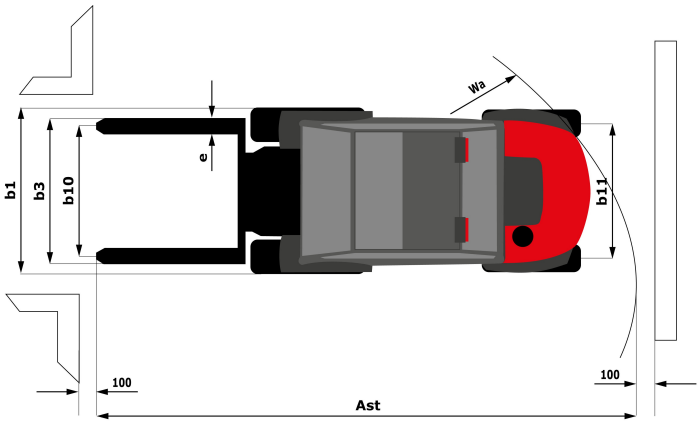

Characteristics of masts and residual capacities

Full Visibility Duplex		FVD 30	FVD 33	FVD 35	FVD 37	FVD 40	FVD 45	FVD 50
h1 - Height mast Lowered	mm	2425	2575	2675	2775	2925	3175	3425
h3 - Lifting Height	mm	3000	3300	3500	3700	4000	4500	5000
h4 - Height mast extended	mm	3977	4277	4477	4677	4977	5477	5977
α / β - Mast inclination (front / rear)	---	10 / 12	10 / 12	10 / 12	10 / 12	10 / 12	10 / 12	10 / 12
Residual capacity at max height	kg	4000	4000	4000	4000	4000	4000	4000

Free Lift Triplex		FLT 37	FLT 40	FLT 43	FLT 45	FLT 47	FLT 50	FLT 55	FLT 60
h2 - Free lift	mm	1258	1358	1458	1533	1593	1708	1858	2033
h1 - Height mast Lowered	mm	2175	2275	2375	2450	2510	2625	2775	2950
h3 - Lifting Height	mm	3700	4000	4300	4500	4700	5000	5500	6000
h4 - Height mast extended	mm	4667	4967	5267	5467	5667	5967	6467	6967
α / β - Mast inclination (front / rear)	---	10 / 12	10 / 12	10 / 12	10 / 12	10 / 12	10 / 12	10 / 12	10 / 12
Residual capacity at max height	kg	4000	4000	4000	4000	3800	3700	3500	3400

MANITOU
HANDLING YOUR WORLD

Siège Social
430 rue de l'Aubinière - 44150 Ancenis Cedex - France
Tel: +33(0)2 40 09 10 11 - Fax: +33 (0)2 40 09 10 97
www.manitou.com

This brochure describes versions and configuration options for Manitou products which may be fitted with different equipment. The equipment described in this brochure may be standard, optional or not available depending on version. Manitou reserves the right to change the specifications shown and described at any time and without prior warning. The manufacturer is not liable for the specifications given. For more information, contact your Manitou dealer. Non-contractual document. Product descriptions may differ from actual products. List of specifications is not comprehensive. The logos and visual identity of the company are the property of Manitou and may not be used without authorisation. All rights reserved. The photos and diagrams contained in thisbrochure are provided for information only.
MANITOU BF SA - Limited company with board of directors - Share capital: 39,547,824 euros - 857 802 508 RCS Nantes